FEET WELLNESS CHAIR KVARK

Production code: 4122, 4128; SKU4122B000

ABSTRACT

Elegant armchair for SPA pedicure with high quality polyurethane upholstery.

LUX KOZMETIKA d.o.o.

Zagreb, Croatia

Contents

About This Manual 2
Warning 2
Precautions 2
Installation 3
Technical parameters 4
Maintenance 5

About This Manual

This manual shall only be used for the reference of operation of this particular model. If the manual is used for other purposes, LUX KOZMETIKA d.o.o. will not undertake any according consequences and responsibility. All information of this manual shall be protected by copyright and shall not be copied and translated in any part of this specification without the written consent of our company LUX KOZMETIKA d.o.o.

Warning

- Do not stand on this equipment.
- Do not allow children to play with and place the equipment in a place where children can touch. Please adjust the backrest to the highest position when you leave.
- Please do not place and operate the equipment in places where is painting/coating or supplying oxygen.
- Unless being monitored or instructed by personnel who can be responsible for their personal safety, the people who have physical obstacles, tactile disorders, mental disorders, lack of experience, common sense or children, are not allowed to use the equipment.
- Please contact distributor, service center or related personal with appropriate skill and experience for repairing if the plug is damaged, in case of any danger.
- Please make sure there is no accessible thing within the stroke during any operation of the beds. Operation should be processed by trained professionals.
- If water leaks from the appliance, the appliance should no longer be used.
- This appliance can be used by children aged from 8 years old and above and persons with reduced physical, sensory or mental capabilities or lack of experience and knowledge if they have been given supervision or instruction concerning use of the appliance in a safe way and understand the hazards involved. Children shall not play with the appliance. Cleaning and user maintenance shall not be made by children without supervision.
- If water leaks from the appliance, the appliance should no longer be used.

Precautions

- This product should be used by an experienced person who must be familiar with the product structure, performance and instructions. And make the regular maintenance work.
- Read this manual carefully before installation, operation and adjustment. And please keep it well. This product shall not be used for single side or single point loading work.
- Comply with safety operation rules, product shall not be overloading, and to ensure that the product safety protection equipment is complete and reliable, eliminates unsafe factors on time.
- Tighten bolts and nuts regularly to avoid failure caused by loose, sliding, vibration and falling off. During the maintenance, the operator shall not disassemble any parts of the bed at will.
- This product is not allowed to operate when it's with fault. If abnormal phenomenon or abnormal sound is found, it must be stopped for inspection immediately, and work can be resumed after troubleshooting. The operator must be familiar with the precautions described in each section of the manual to ensure the safety of person and product.
- This product is equipped with a three-wire power cord. The power cord must be plugged into a three-hole outlet which is properly installed and grounded. This is not only to prevent the risk of electric shock, but ensure product can work properly.
- Please operate the product strictly accordance with the warning label stamped on it.
- While controlling the lifting, the button must be pressed continuously until the product in a suitable position.
- Please pay attention that the continuous working times should be Max. 2Min. ON; 18Min. OFF, when operating the motor.
- Maintenance should be processed by trained professionals.
- After every treatment, please only use neutral solution to clear the dust or stains on the product.
- When adjusting each part, please keep your hands, feet and head away from the position indicated by the arrow. (As shown in the photo)

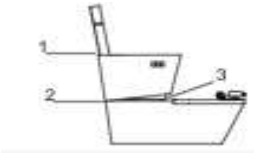

Installation

1. Put the product to a proper location, according to the overall layout, the daylighting or artificial lightings and operation condition of the salon' s or the home. And keep it in the clean, dry and cool environment.
2. Open the packing carton to check if the product is intact and whether the accessories or spares are complete. Please contact distributor or us if there's any problem.
3. Installation

Place the product to the proper position. Please note that it is unnecessary to install extra screws on the floor to fasten the bed, because the original design has taken the stability into consideration.

But please ensure the product is placed on a firm and flat ground, so as to prevent any accident. If the product rotates or slant due to rough ground, please adjust the four pieces of plastic feet (M10×30) and nuts (M10) by hexagon open-end wrench, which are fasten on the bottom panel, so as to ensure the product is stable.

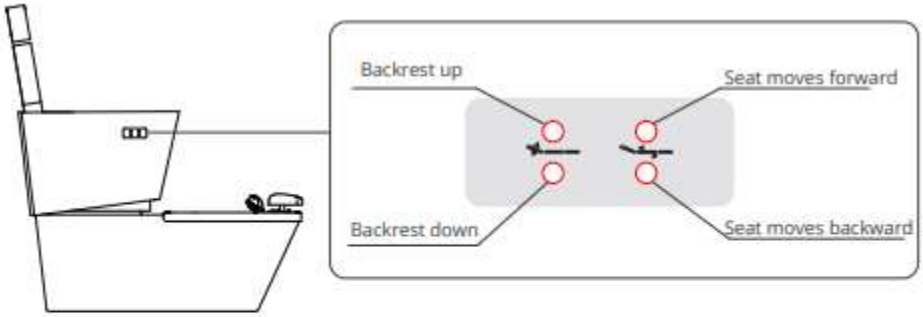

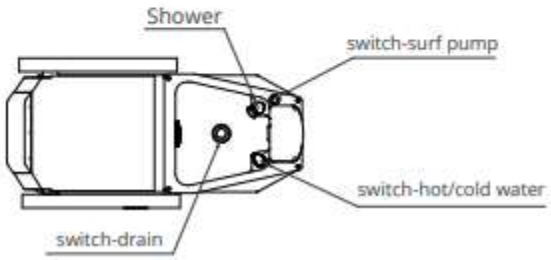

Technical parameters

Power	AC 110-240V,50/60Hz
Maximum Power	250W
Max loading capacity	175kg
Max. inlet water pressure (Pa)	0.3Mpa
Package Size	130×79×97cm

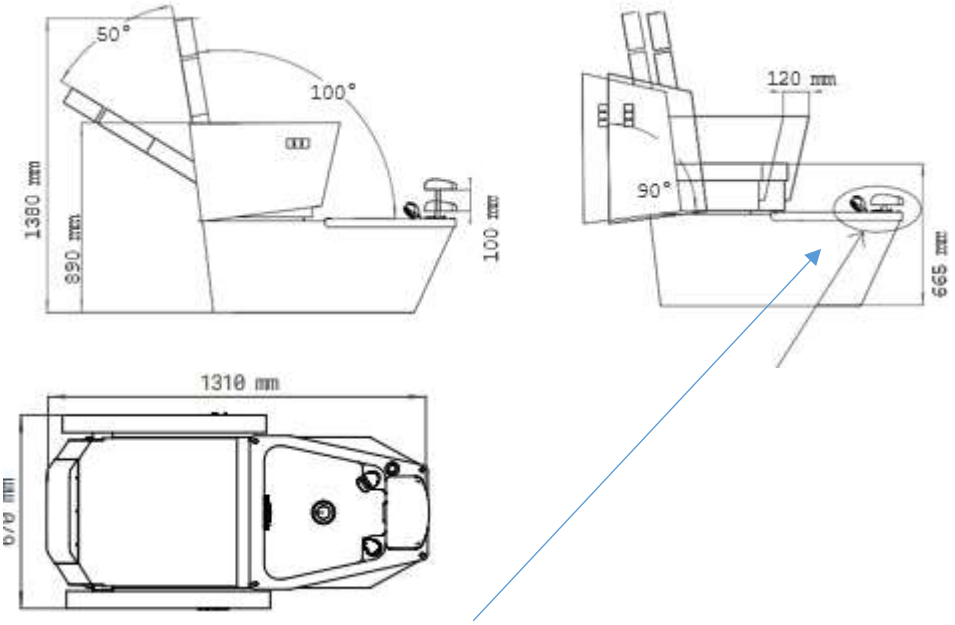

Footrest adjustment ：	The height of the foot pad is divided into 6 levels. Each of level is 10mm, and the maximum can be adjusted to 60mm;
	Adjustment method: First pull out the footrest and then pull up 10mm each time, to adjust to the appropriate level you want

Maintenance

1. After every treatment, please only use neutral solution to clear the dust, stains on leather, metal part or other parts. Disinfecting solution like alcohol, acid or alkaline solution are forbidden. This is to prevent the lifetime of the components from being shortened.
2. Please lubricate the moving parts regularly (once a year)

Circuit system connection diagram

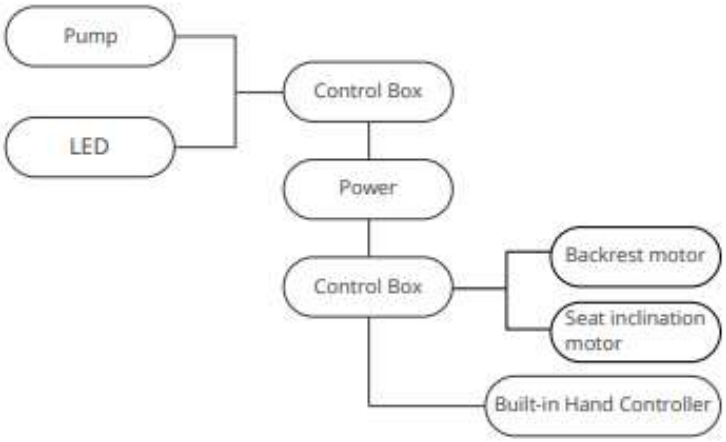

Troubleshooting

Fault phenomenon	Reason	Solution
Abnormal sound	Rotating parts are short of lubricating oil	Add lubricating oil
	Rotating parts (such as hinge, POM sets, gas lift) are short of lubricating oil	Add lubricating oil
Basin water leakage	Aging of drain sealing ring	Replace a new sealing ring

If the problem is not solved using above given instructions/ tips, pls contact maintenance center or supplier to solve it.



Do not dispose of old or defective appliances in domestic garbage; this should only be done through public collection points.

▲ Please check the product specification before use. This manual is for reference only. Specifications are subject to change without prior notice.